VM REF.DOC.: DSS 5181-03
ATP 1323-04

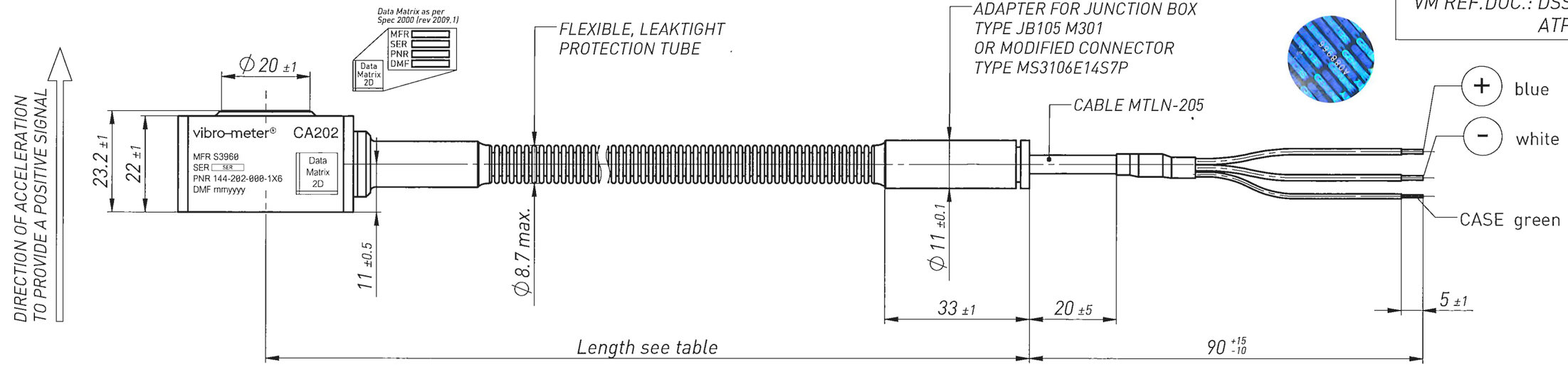

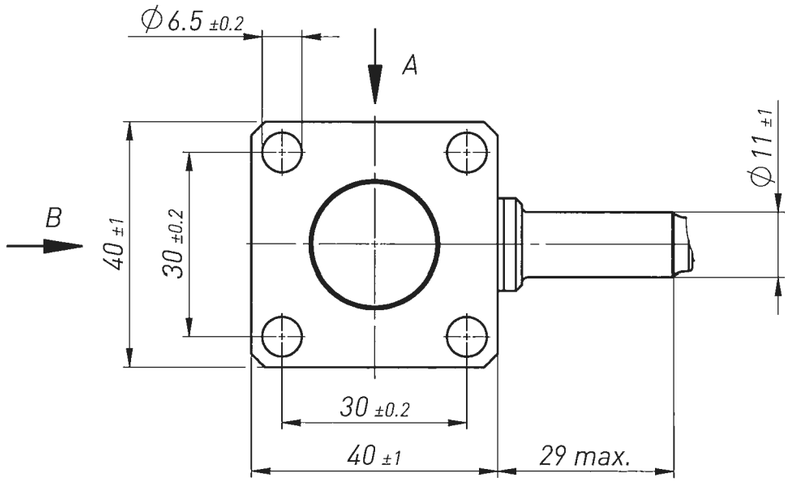

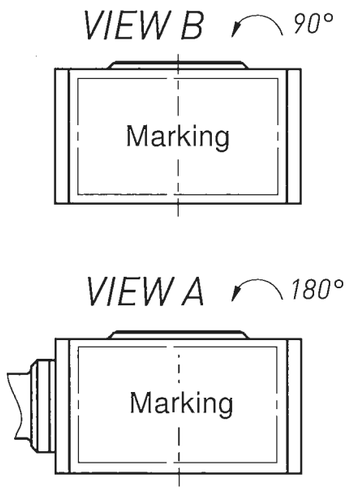

FOR THE CONNECTOR OPTION: THEN PIN A = +
PIN B = -
PIN C = CASE

PLASTIC BAG (1:2)

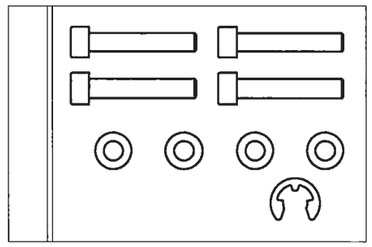

- 4 screws M6x35
- 4 washers for M6
- Clip DIN 6799

RoHS
DIRECTIVE 2011/65/UE

NO MODIFICATION ALLOWED WITHOUT PRIOR AUTHORIZATION OF Ex MANAGER
22/3/2021

SENSITIVITY: 100 ±5 pC/g
TEMPERATURE: -55°C to +260°C

ORDERING NUMBER:

Version	Length
144-202-000-106	3000±25
144-202-000-116	6000±25
144-202-000-126	11000±100
144-202-000-136	20000 ±200

Rev.	Date	Change N°	Drawn	Appr.	Description
2	10.03.21	19144	C.Roulin	F.Micco	Removal of -2X6 versions
1	05.11.20	19144	C.Roulin	F.Micco	Change in marking format

INFORMATION CONTAINED IN THIS DOCUMENT MAY BE SUBJECT TO EXPORT CONTROL REGULATIONS OF THE EUROPEAN UNION, USA OR OTHER COUNTRIES. EACH RECIPIENT OF THIS DOCUMENT IS RESPONSIBLE FOR ENSURING THAT TRANSFER OR USE OF ANY INFORMATION CONTAINED IN THIS DOCUMENT COMPLIES WITH ALL RELEVANT EXPORT CONTROL REGULATIONS. ECN NO. N/A
THIS DRAWING AND/OR ITS DESIGN IS PROPRIETARY AND THE PROPERTY OF MEGGITT SA. THIS DRAWING AND/OR ITS DESIGN IS PROVIDED TO YOU SUBJECT TO THE CONDITION THAT IT SHALL NOT BE REPRODUCED, COPIED, LENT OR OTHERWISE DISPOSED OF, DIRECTLY OR INDIRECTLY. IT SHALL NOT BE USED TO FURNISH ANY INFORMATION FOR THE MAKING OF DRAWINGS, PRINTS OR APPARATUS, OR PARTS THEREFORE, EXCEPT WHERE OTHERWISE EXPRESSLY PROVIDED FOR BY CONTRACT WITH MEGGITT SA.
© MEGGITT SA 2020. ALL RIGHTS RESERVED. NO PART OF THIS PUBLICATION MAY BE REPRODUCED, STORED IN A RETRIEVAL SYSTEM, OR TRANSMITTED IN ANY FORM OR BY ANY MEANS, ELECTRONIC, MECHANICAL, PHOTOCOPIED OR IN ANY OTHER MANNER WITHOUT THE PRIOR WRITTEN PERMISSION OF MEGGITT SA.

MFR S3960 | MSS-CAD | Scale 1:1 | Format A3

MEGGITT
Meggitt SA
Rte de Moncor 4, CH-1752 Villars-sur-Glâne, Switzerland

Material: | Repl.by: | Repl.for:

Linear Tolerances [mm]: › 0,5 ... 3 | › 3 ... 6 | › 6 ... 30 | › 30 ... 120 | › 120 ... 400 | ›400 ...1000 | ›1000 ...2000 | ›2000 ...4000
Radius / Chamfers [mm]: › 0,5 ... 3 | › 3 ... 6 | › 6
Tol. on angle [°] L [mm]: ... 10 | › 10 ... 50 | › 50 ... 120 | › 120 ... 400
- - - - - - - - - - - - - - - -

Drawn	19.12.19	M.Waeber
Check.	19.12.19	C.Roulin
Appr.	19.12.19	F.Micco

ACCELEROMETER TYPE CA 202
PNR 144-202-000-106

DWG.N°
144-202-000 D 106