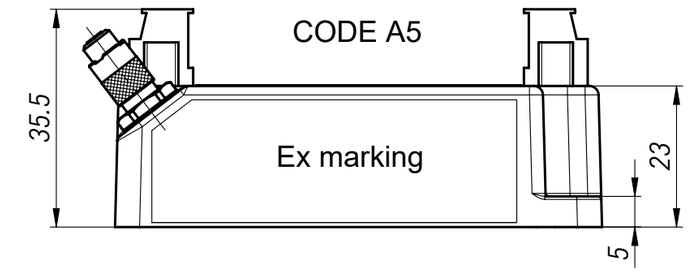

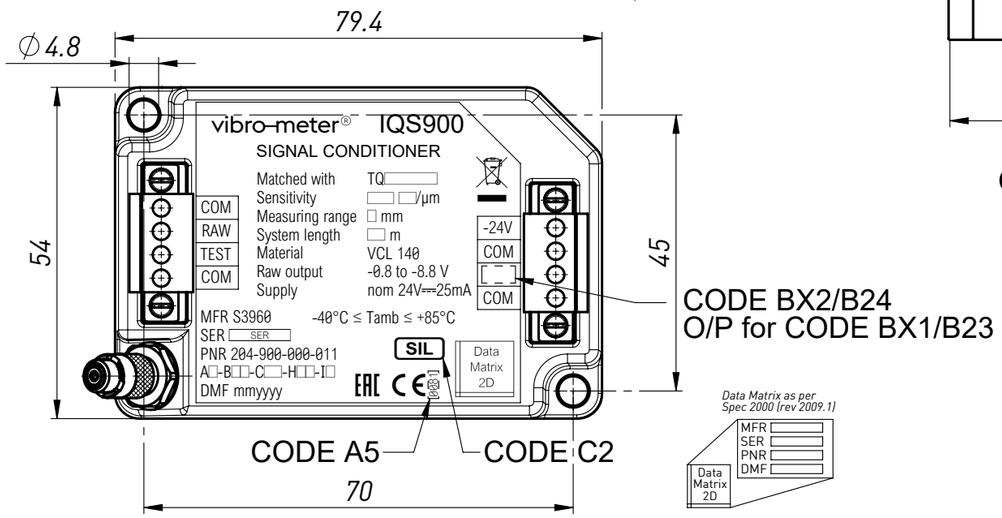

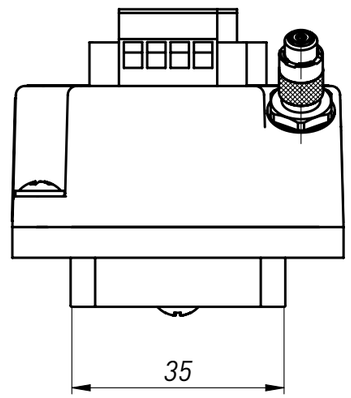

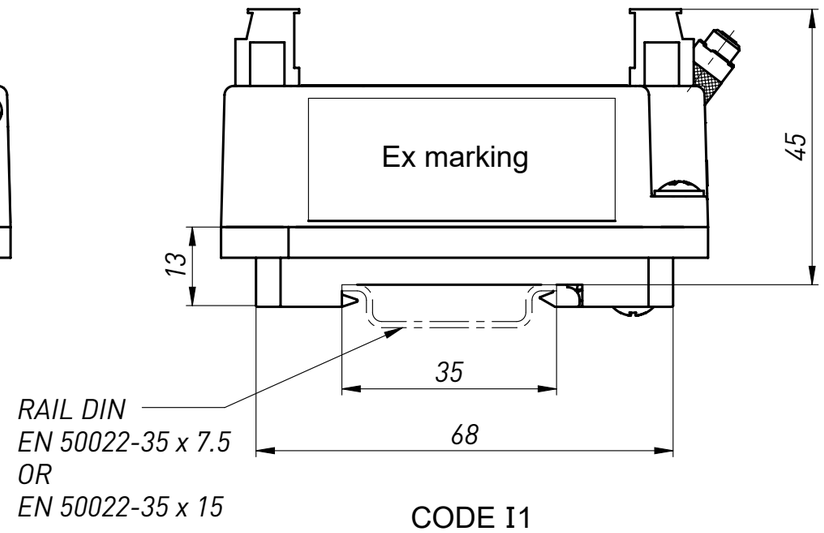

ORDERING NUMBER: 204-900-000-011-A□-B□□-C□-H□□-I□

ENVIRONMENT	A
Standard	1
Explosive (Ex)	5

PROXIMITY TRANSDUCER	MEASURING RANGE	SENSITIVITY	B
TQ401/9X1	2 mm	8 mV/µm	11
		2.5 µA/µm	12
TQ4X2/9X2	2 mm	8 mV/µm	21
		2.5 µA/µm	22
	4 mm	4 mV/µm	23
		1.25 µA/µm	24
TQ4X3/9X3	12 mm	1.33 mV/µm	31
		0.417 µA/µm	32

DIAGNOSTIC	C
Without diagnostic	1
With diagnostic (SIL)	2

TOTAL SYSTEM LENGTH	H
1 m*	01
5 m	05
10 m	10

*only available with code B 2X

INSTALLATION	I
Signal conditioner only	0
Signal conditioner mounted on mounting adapter	1

NO MODIFICATION ALLOWED
WITHOUT PRIOR AUTHORIZATION
OF Ex MANAGER

RoHS
DIRECTIVE 2011/65/UE

NO MODIFICATION ALLOWED
WITHOUT PRIOR AUTHORIZATION OF
SIL FUNCTIONAL SAFETY MANAGER

Rev.	Date	Change N°	Drawn	Appr.	Description
5	15.01.24	20133	C.Roulin	F.Micco	Supply, raw output and temperatures added
4	15.03.23	20133	C.Roulin	F.Micco	Note for output added
3	08.04.22	20133	C.Roulin	F.Micco	Main label reworked and completed with UKCA
2	02.06.21	20133	C.Roulin	F.Micco	EAC added
1	25.03.21	20133	C.Roulin	F.Micco	∅ 4.8 and note "*only available with code B2X" added

INFORMATION CONTAINED IN THIS DOCUMENT MAY BE SUBJECT TO EXPORT CONTROL REGULATIONS OF THE EUROPEAN UNION, USA OR OTHER COUNTRIES. EACH RECIPIENT OF THIS DOCUMENT IS RESPONSIBLE FOR ENSURING THAT TRANSFER OR USE OF ANY INFORMATION CONTAINED IN THIS DOCUMENT COMPLIES WITH ALL RELEVANT EXPORT CONTROL REGULATIONS. ECN NO. N/A
THIS DRAWING AND/OR ITS DESIGN IS PROPRIETARY AND THE PROPERTY OF MEGGITT SA. THIS DRAWING AND/OR ITS DESIGN IS PROVIDED TO YOU SUBJECT TO THE CONDITION THAT IT SHALL NOT BE REPRODUCED, COPIED, LENT OR OTHERWISE DISPOSED OF, DIRECTLY OR INDIRECTLY. IT SHALL NOT BE USED TO FURNISH ANY INFORMATION FOR THE MAKING OF DRAWINGS, PRINTS OR APPARATUS, OR PARTS THEREFORE, EXCEPT WHERE OTHERWISE EXPRESSLY PROVIDED FOR BY CONTRACT WITH MEGGITT SA.
© MEGGITT SA 2020. ALL RIGHTS RESERVED. NO PART OF THIS PUBLICATION MAY BE REPRODUCED, STORED IN A RETRIEVAL SYSTEM, OR TRANSMITTED IN ANY FORM OR BY ANY MEANS, ELECTRONIC, MECHANICAL, PHOTOCOPIED OR IN ANY OTHER MANNER WITHOUT THE PRIOR WRITTEN PERMISSION OF MEGGITT SA.

MFR S3960 | MSS-CAD

Electronically signed document / Authorised issue by Doc Control

MEGGITT

Meggitt SA
Rte de Moncor 4, CH-1752 Villars-sur-Glâne, Switzerland

Scale 1:1 | Format A3

Material:

Repl.by:

Repl.for:

Linear Tolerances [mm]								Radius / Chamfers [mm]			Tol. on angle [°] L [mm]			
› 0,5 ... 3	› 3 ... 6	› 6 ... 30	› 30 ... 120	› 120 ... 400	›400 ...1000	›1000 ...2000	›2000 ...4000	› 0,5 ... 3	› 3 ... 6	› 6	... 10	› 10 ... 50	› 50 ... 120	› 120 ... 400
-	-	-	-	-	-	-	-	-	-	-	-	-	-	-

Drawn	12.10.20	C.Roulin
Check.	12.10.20	I.Mauconduit
Appr.	12.10.20	F.Micco

SIGNAL CONDITIONER TYPE IQS900

PNR 204-900-000-011

DWG.N°
204-900-000 V 011