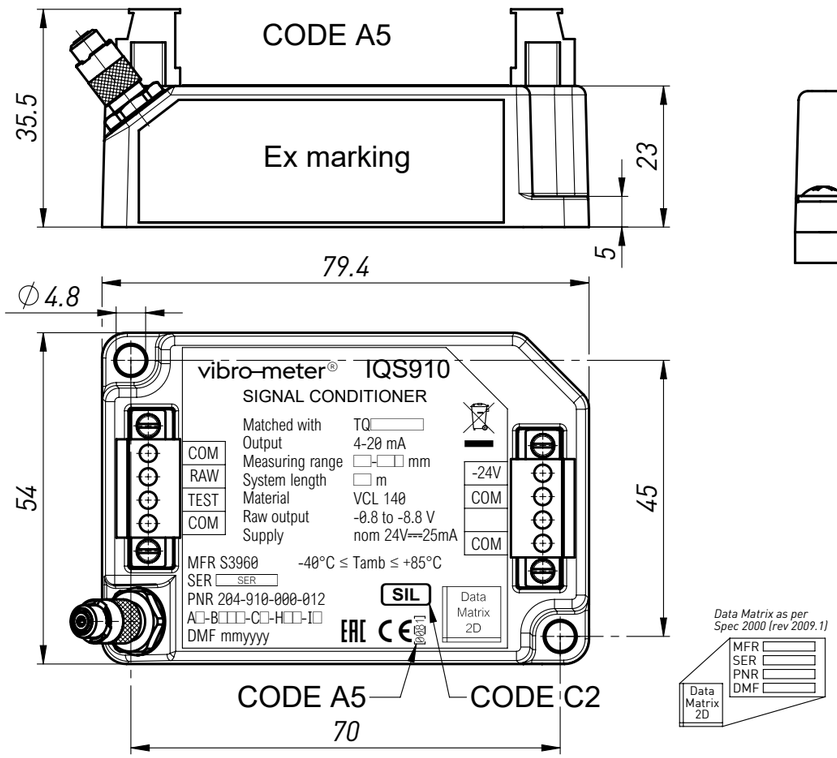

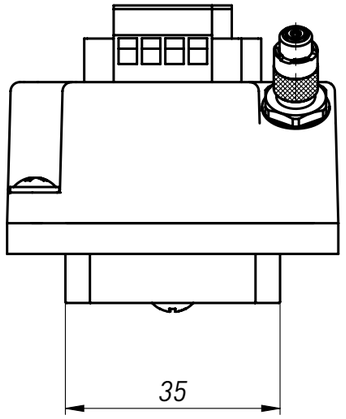

CODE I1

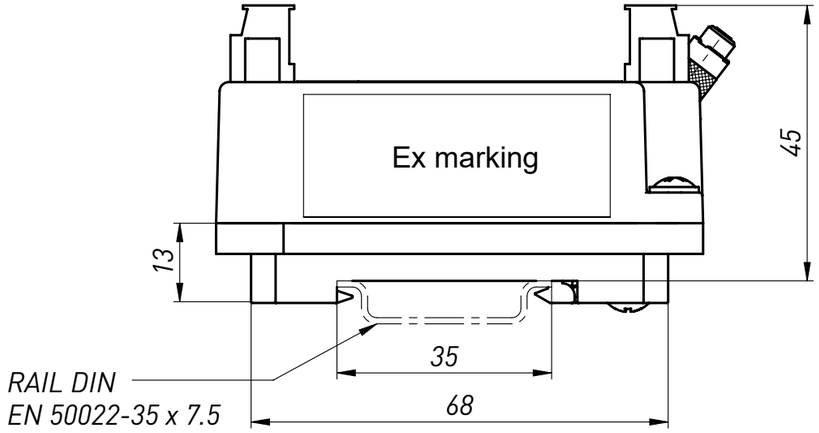

CODE I1

NO MODIFICATION ALLOWED
WITHOUT PRIOR AUTHORIZATION
OF Ex MANAGER

RoHS
DIRECTIVE 2011/65/UE

NO MODIFICATION ALLOWED
WITHOUT PRIOR AUTHORIZATION OF
SIL FUNCTIONAL SAFETY MANAGER

ORDERING NUMBER: 204-910-000-012-A□-B□□□-C□-H□□-I□

ENVIRONMENT	A
Standard	1
Explosive (Ex)	5

C	DIAGNOSTIC
1	Without diagnostic
2	With diagnostic (SIL)

H	TOTAL SYSTEM LENGTH
01	1 m*
05	5 m
10	10 m

*only available with code B2XX

I	INSTALLATION
0	Signal conditioner only
1	Signal conditioner mounted on mounting adapter

PROXIMITY TRANSDUCER	MEASURING RANGE CORRESPONDING TO 4-20 mA		B
	POSITION	VIBRATION	
TQ401/9X1	0.2-2.2 mm	-	101
	-	0-100 µm	121
	-	0-125 µm	122
	-	0-150 µm	123
	-	0-200 µm	124
	-	0-250 µm	125
	-	0-500 µm	126
TQ4X2/9X2	0.15-2.15 mm	-	201
	-	0-100 µm	221
	-	0-125 µm	222
	-	0-150 µm	223
	-	0-200 µm	224
	-	0-250 µm	225
	-	0-500 µm	226

For Vibration:
2 mm measuring range

Rev.	Date	Change N°	Drawn	Appr.	Description
2	15.01.24	20133	C.Roulin	F.Micco	Supply, raw output and temperatures added
1	15.03.23	20133	C.Roulin	F.Micco	Output change

INFORMATION CONTAINED IN THIS DOCUMENT MAY BE SUBJECT TO EXPORT CONTROL REGULATIONS OF THE EUROPEAN UNION, USA OR OTHER COUNTRIES. EACH RECIPIENT OF THIS DOCUMENT IS RESPONSIBLE FOR ENSURING THAT TRANSFER OR USE OF ANY INFORMATION CONTAINED IN THIS DOCUMENT COMPLIES WITH ALL RELEVANT EXPORT CONTROL REGULATIONS. ECN NO. N/A
THIS DRAWING AND/OR ITS DESIGN IS PROPRIETARY AND THE PROPERTY OF MEGGITT SA. THIS DRAWING AND/OR ITS DESIGN IS PROVIDED TO YOU SUBJECT TO THE CONDITION THAT IT SHALL NOT BE REPRODUCED, COPIED, LENT OR OTHERWISE DISPOSED OF, DIRECTLY OR INDIRECTLY. IT SHALL NOT BE USED TO FURNISH ANY INFORMATION FOR THE MAKING OF DRAWINGS, PRINTS OR APPARATUS, OR PARTS THEREFORE, EXCEPT WHERE OTHERWISE EXPRESSLY PROVIDED FOR BY CONTRACT WITH MEGGITT SA.
© MEGGITT SA 2022. ALL RIGHTS RESERVED. NO PART OF THIS PUBLICATION MAY BE REPRODUCED, STORED IN A RETRIEVAL SYSTEM, OR TRANSMITTED IN ANY FORM OR BY ANY MEANS, ELECTRONIC, MECHANICAL, PHOTOCOPIED OR IN ANY OTHER MANNER WITHOUT THE PRIOR WRITTEN PERMISSION OF MEGGITT SA.

MFR S3960 | MSS-CAD | Scale 1:1 | Format A3

Electronically signed document / Authorised issue by Doc Control

MEGGITT
Meggitt SA
Rte de Moncor 4, CH-1752 Villars-sur-Glâne, Switzerland

Material:

Linear Tolerances [mm]

› 0,5 ... 3	› 3 ... 6	› 6 ... 30	› 30 ... 120	› 120 ... 400	›400 ...1000	›1000 ...2000	›2000 ...4000
-	-	-	-	-	-	-	-

Radius / Chamfers [mm]

› 0,5 ... 3	› 3 ... 6	› 6
-	-	-

Tol. on angle [°] L [mm]

... 10	› 10 ... 50	› 50 ... 120	› 120 ... 400
-	-	-	-

Repl.by:

Repl.for:

Drawn	07.12.22	C.Roulin
Check.	07.12.22	F.Picard
Appr.	07.12.22	F.Micco

SIGNAL CONDITIONER TYPE IQS910

PNR 204-910-000-012

DWG.N°
204-910-000 V 012