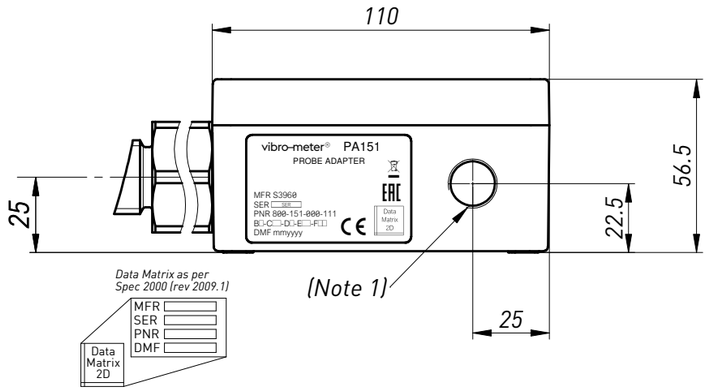

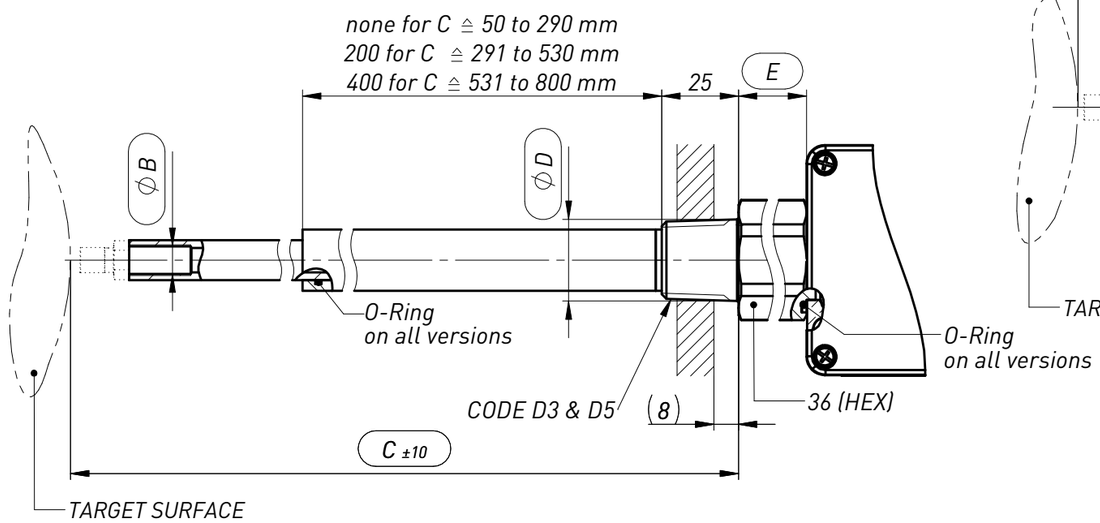

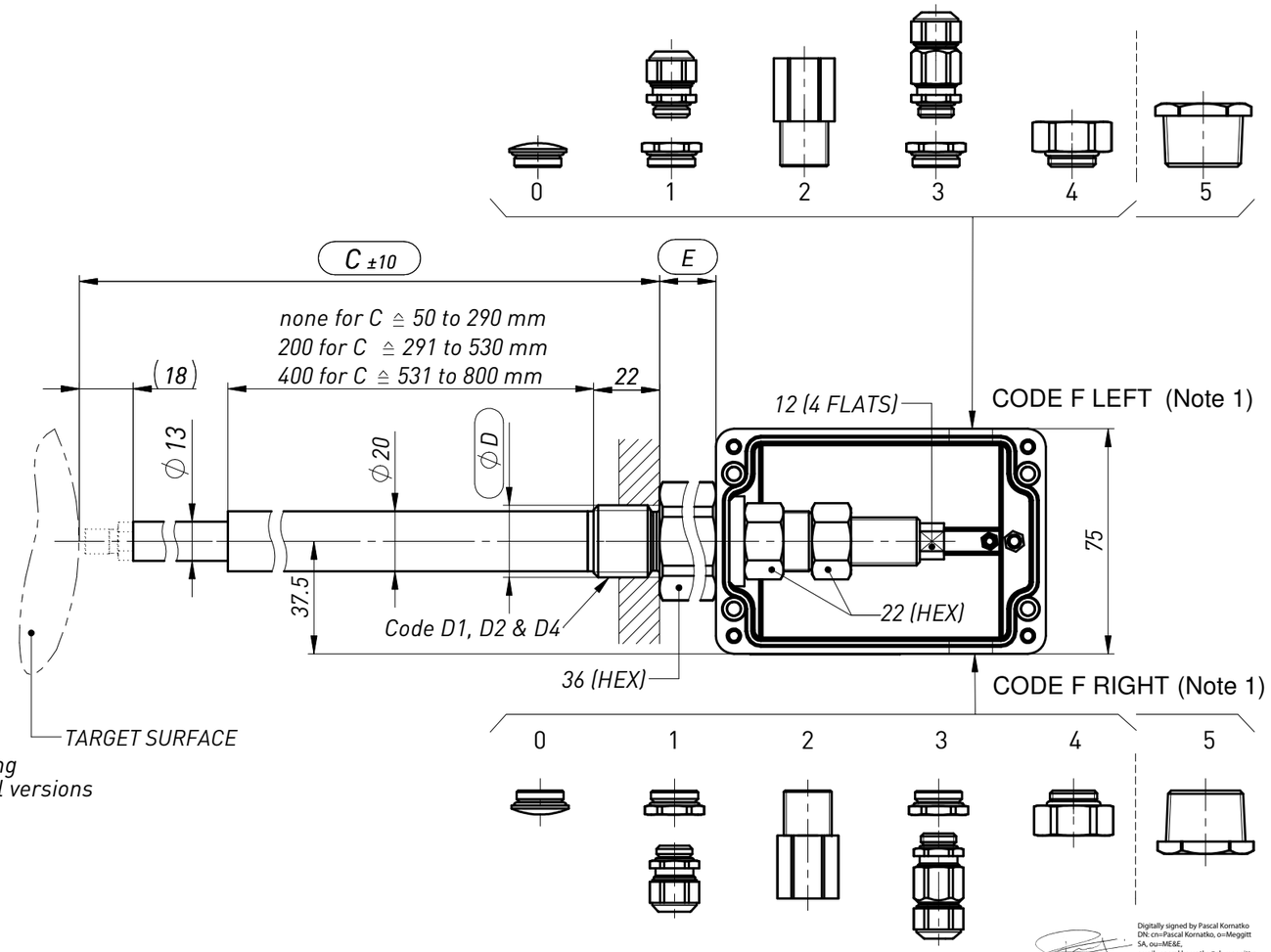

Digitally signed by Pascal Kornatko
DN: cn=Pascal Kornatko, o=Meggitt SA, ou=ME&E, email=pascal.kornatko@ch.meggitt.com, c=CH
Date: 2022.01.20 07:51:46 +01'00'

ORDERING NUMBER: 800-151-000-111-B□-C□□□-D□-E□□□-F□□

SENSOR THREAD	B
M10x1	1
3/8"-24 UNF	2

ROD LENGTH [mm]	C
Each 1 mm from 50 to 800	
Min. 50	50
Max. 800	800

ADAPTER THREAD	D
M24	1
7/8"-14 UNF	2
3/4" NPT	3
G 3/4"	4
1" NPT	5

ADAPTER LENGTH [mm]	E
15	15
105	105
195	195

CABLE FITTING F	LEFT	RIGHT
M16x1.5 with plug	0	0
Cable gland M12x1.5 for cable Ø2.5 to 3.6 mm	1	1
Adapter M16x1.5/PG9	2	2
Cable gland combi M12x1.5 for cable Ø2 to Ø4 mm and BOA Ø6 to Ø8 mm	3	3
Adapter M16x1.5 / M20x1.5 (Cable Ø12 mm max.)	4	4
3/4" NPT with plug (Note 2)	55	

Note 1: Code F0 to F4 - Housing with left and right M16x1.5 threads
Code F5 - Housing with left and right 3/4" NPT threads

Note 2: 3/4" NPT cannot be combined with the other cable fittings

RoHS
DIRECTIVE 2011/65/UE

NO MODIFICATION ALLOWED WITHOUT PRIOR AUTHORIZATION OF Ex MANAGER

Rev.	Date	Change N°	Drawn	Appr.	Description

INFORMATION CONTAINED IN THIS DOCUMENT MAY BE SUBJECT TO EXPORT CONTROL REGULATIONS OF THE EUROPEAN UNION, USA OR OTHER COUNTRIES. EACH RECIPIENT OF THIS DOCUMENT IS RESPONSIBLE FOR ENSURING THAT TRANSFER OR USE OF ANY INFORMATION CONTAINED IN THIS DOCUMENT COMPLIES WITH ALL RELEVANT EXPORT CONTROL REGULATIONS. ECN NO. N/A
THIS DRAWING AND/OR ITS DESIGN IS PROPRIETARY AND THE PROPERTY OF MEGGITT SA. THIS DRAWING AND/OR ITS DESIGN IS PROVIDED TO YOU SUBJECT TO THE CONDITION THAT IT SHALL NOT BE REPRODUCED, COPIED, LENT OR OTHERWISE DISPOSED OF, DIRECTLY OR INDIRECTLY. IT SHALL NOT BE USED TO FURNISH ANY INFORMATION FOR THE MAKING OF DRAWINGS, PRINTS OR APPARATUS, OR PARTS THEREFORE, EXCEPT WHERE OTHERWISE EXPRESSLY PROVIDED FOR BY CONTRACT WITH MEGGITT SA.
© MEGGITT SA 2022. ALL RIGHTS RESERVED. NO PART OF THIS PUBLICATION MAY BE REPRODUCED, STORED IN A RETRIEVAL SYSTEM, OR TRANSMITTED IN ANY FORM OR BY ANY MEANS, ELECTRONIC, MECHANICAL, PHOTOCOPIED OR IN ANY OTHER MANNER WITHOUT THE PRIOR WRITTEN PERMISSION OF MEGGITT SA.

MFR S3960 | MSS-CAD | Scale 1:2 | Format A3

Electronically signed document / Authorised issue by Doc Control

MEGGITT

Meggitt SA
Rte de Moncor 4, CH-1752 Villars-sur-Glâne, Switzerland

Material:

Repl.by:

Repl.for:

	Linear Tolerances [mm]								Radius / Chamfers [mm]			Tol. on angle [°] (L [mm])			
	› 0,5 ... 3	› 3 ... 6	› 6 ... 30	› 30 ... 120	› 120 ... 400	›400 ...1000	›1000 ...2000	›2000 ...4000	› 0,5 ... 3	› 3 ... 6	› 6	... 10	› 10 ... 50	› 50 ... 120	› 120 ... 400
	-	-	-	-	-	-	-	-	-	-	-	-	-	-	-

Drawn	19.01.22	R.Guerreiro (Digitally signed by Ruben Guerreiro Date: 2022.01.19 17:58:54 +01'00')
Check.	19.01.22	F.Charra (Signature numérique de CHARRA Frédéric Date : 2022.01.20 16:44:16 +01'00')
Appr.	19.01.22	F.Micco

PROBE ADAPTER WITH HOUSING

PA151

DWG.N°
800-151-000 V 111