THE INFORMATION DISCLOSED HEREIN WAS ORIGINATED BY AND IS THE PROPERTY OF VIBRO-METER. VIBRO-METER RESERVES ALL PATENT, PROPRIETARY, DESIGN, USE, SALE, MANUFACTURING AND REPRODUCTION RIGHTS THERETO.

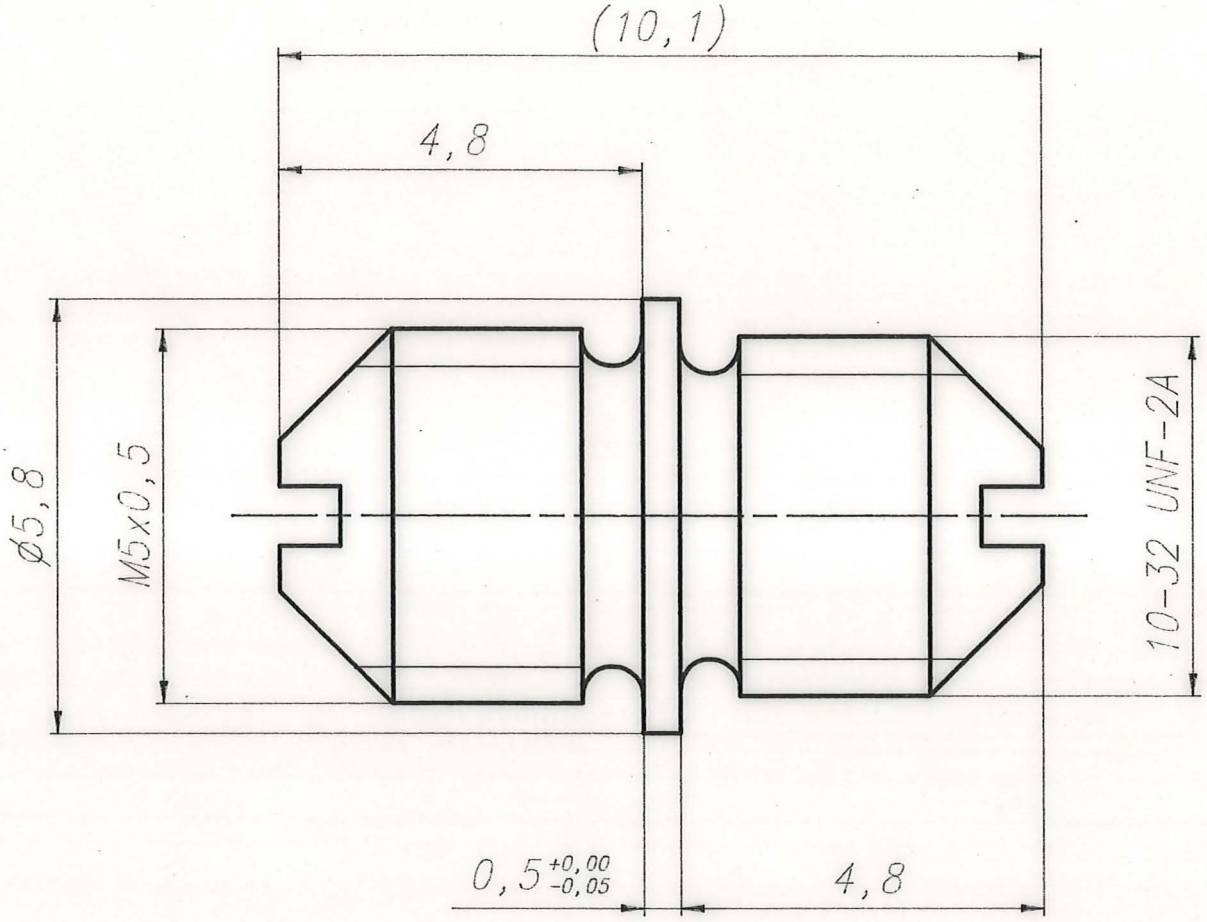

RoHS
DIRECTIVE 2011/65/UE

Rev.	Date	Drawn	Appr.	Repl.by : / Repl.for:
6				
5				
4				
3				
2				
1				

Tolerances: ± 0,1 mm to 50 mm; ± mm over 50 mm

Material: Stainless steel

Finish :

FSCM N° S 3960

vibro-meter SWITZERLAND

Scale 10:1

Drawn	15.9.89	
Checked	15.9.89	
Appr.	18.5.89	

Mounting Stud Type MA 109

PN 809-109-000-011

DWG.N° 809-109-000 D 011