THE INFORMATION DISCLOSED HEREIN WAS ORIGINATED BY AND IS THE PROPERTY OF VIBRO-METER. VIBRO-METER RESERVES ALL PATENT, PROPRIETARY, DESIGN, USE, SALE, MANUFACTURING AND REPRODUCTION RIGHTS THERETO.

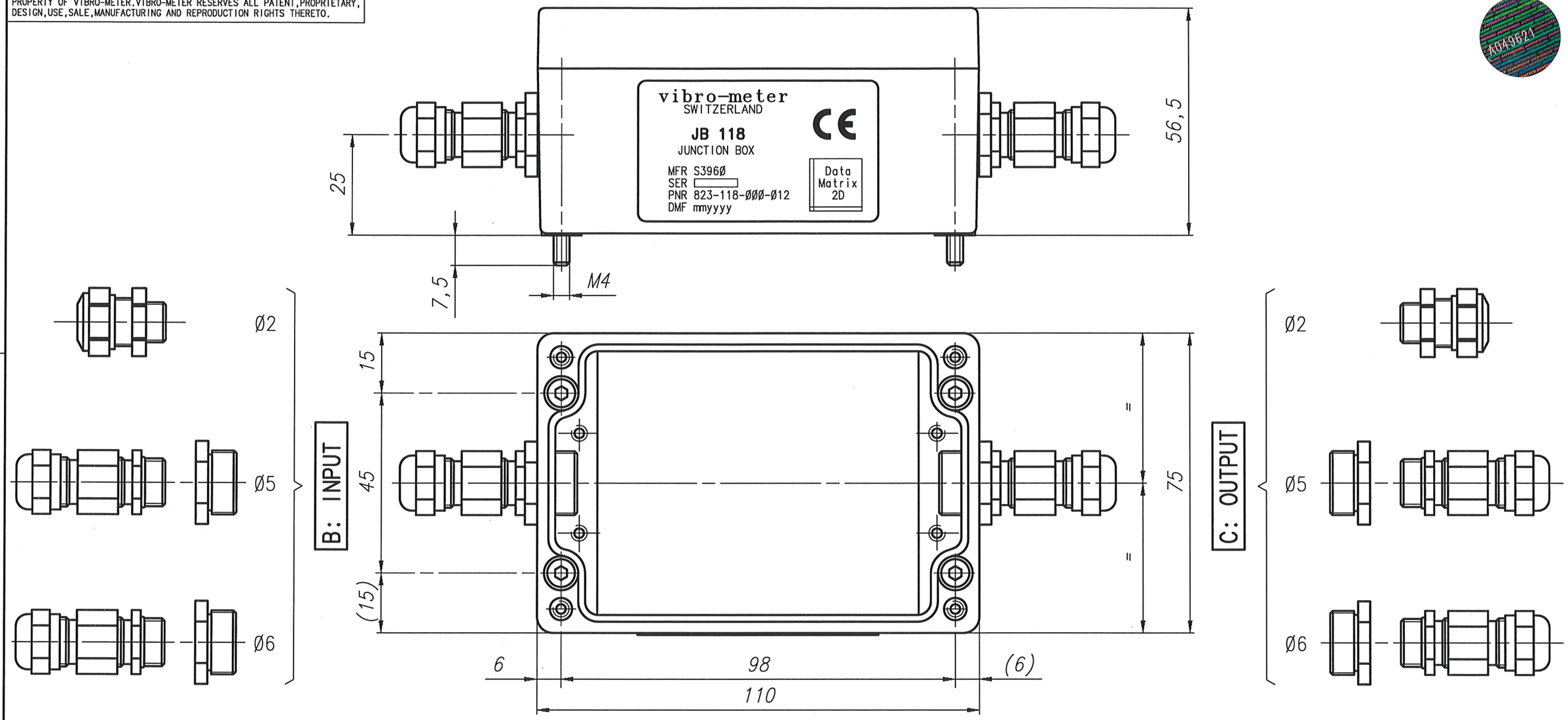


ORDERING NUMBER: 823-118-000-012-B1XX-C1XX

| CABLE FITTING INPUT | |
|---|---|
| Cable gland M12x1,5 for cable Ø2,5 ÷ Ø3,6 mm | Ø2 * |
| Cable gland combi M12x1,5 for cable Ø2 ÷ Ø4mm and BOA Ø6 ÷ Ø8mm | Ø5 |
| Cable gland combi M12x1,5 for cable Ø0,7 ÷ Ø2,7mm and BOA Ø5 ÷ Ø7mm | Ø6 |

| CABLE FITTING OUTPUT | |
|---|---|
| Cable gland M12x1,5 for cable Ø2,5 ÷ Ø3,6 mm | Ø2 * |
| Cable gland combi M12x1,5 for cable Ø2 ÷ Ø4mm and BOA Ø6 ÷ Ø8mm | Ø5 |
| Cable gland combi M12x1,5 for cable Ø0,7 ÷ Ø2,7mm and BOA Ø5 ÷ Ø7mm | Ø6 |

* Code Ø2: selecting option B or C "Ø2" allows you to feed through a connector up to 7,2 mm diameter

RoHS
DIRECTIVE 2011/65/UE

AUCUNE MODIFICATION PERMISE SANS ACCORD DU RESPONSABLE Ex

| Rev. | Date | PM | Drawn | Appr. | Repl.by : / Repl.for: 823-118-000V011(PM06195) |
|---|---|---|---|---|---|
| 6 | | | | | |
| 5 | | | | | |
| 4 | | | | | |
| 3 | | | | | |
| 2 | | | | | |
| 1 | 07.07.08 | 08323 | M.Waeber | | Ajouter cote 45 ! |

Tolerances: ± 0,1 mm to 50 mm; ± 0,2 mm over 50 mm

Material:

Finish :

FSCM N° S 3960

Vibro-Meter SWITZERLAND

VM-CAD

| Scale | | | |
|---|---|---|---|
| 1 : 1 | Drawn | 07.06.06 | M.Waeber |
| | Checked | 07.06.06 | N.Mancini |
| | Appr. | 07.06.06 | F.Micco |

JUNCTION BOX

TYPE : JB 118

DWG.N° 823-118-000 V 012