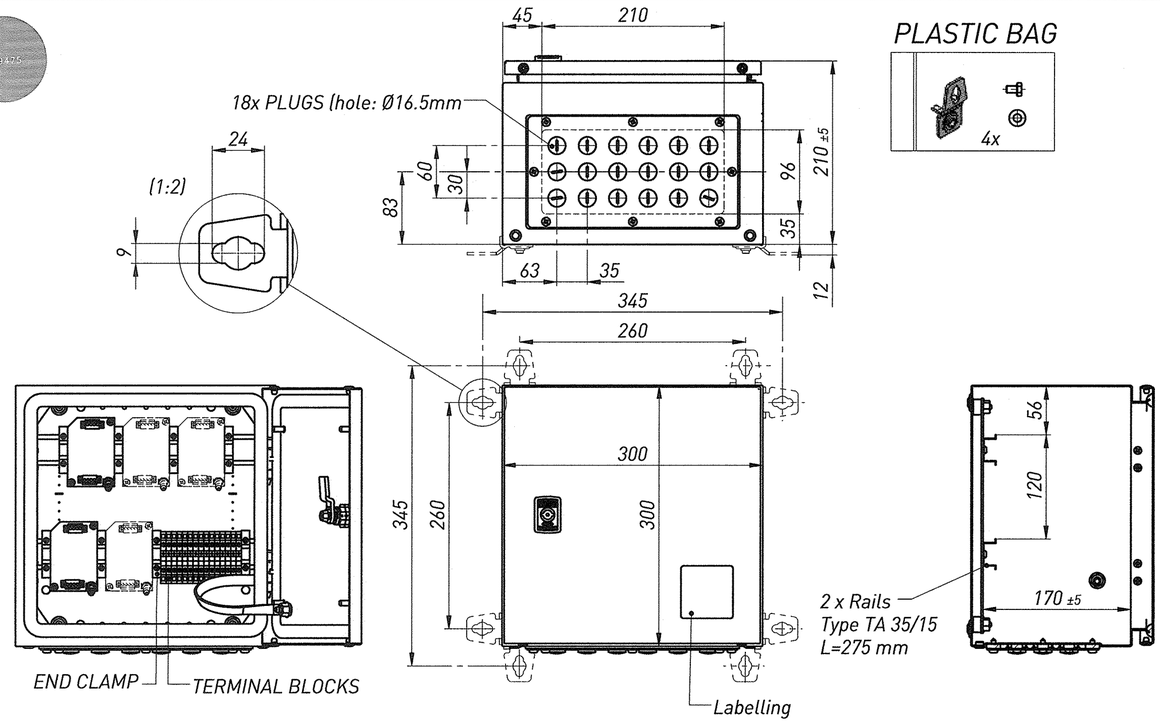

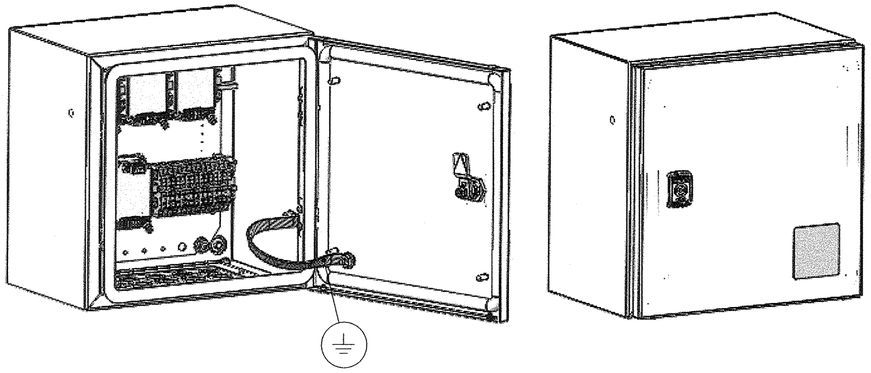

CODE A1

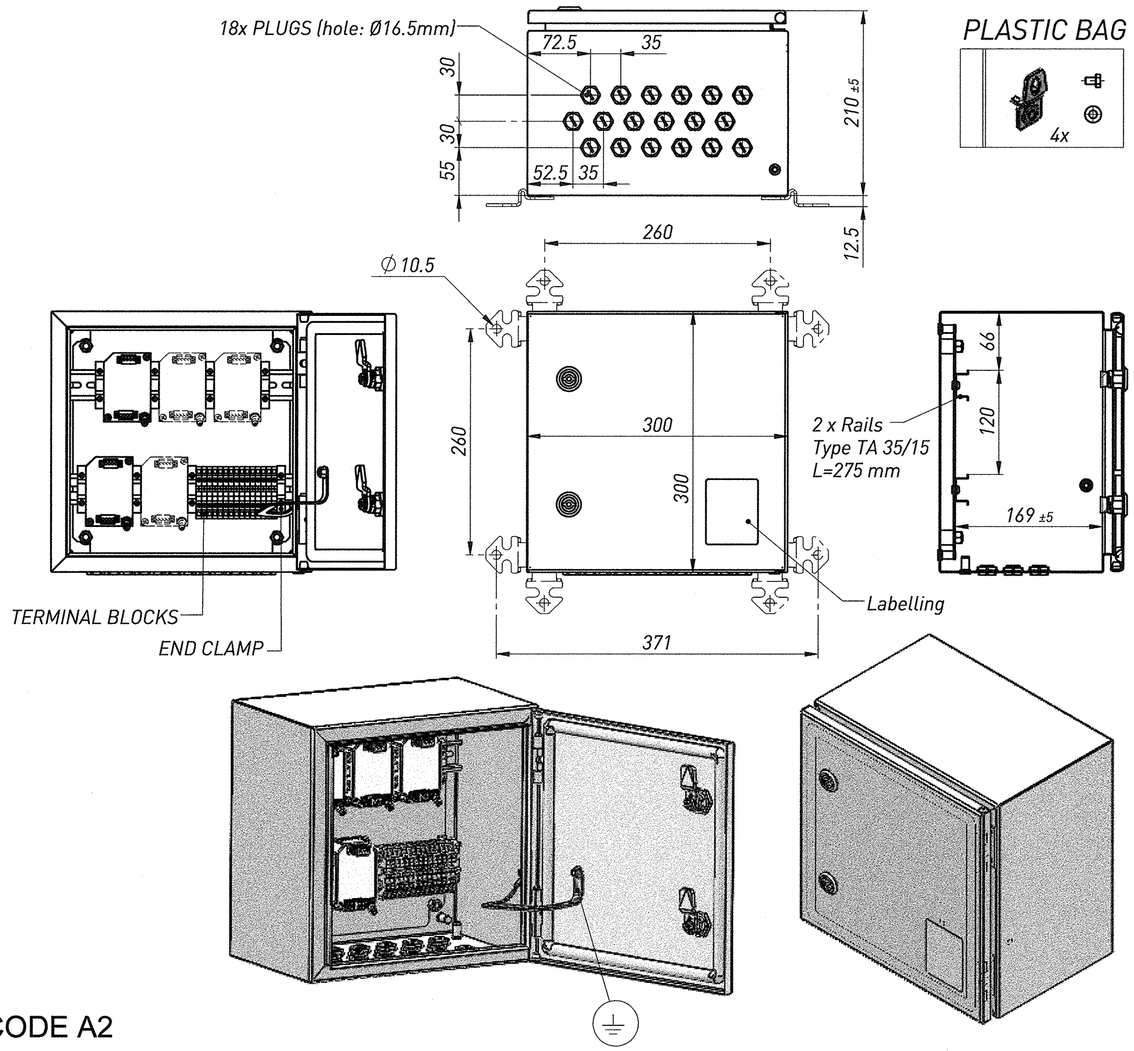

CODE A2

NOTE: Conditioners are shown for illustration only and must be ordered separately.

ORDERING NUMBER: 830-173-000-011-AX-BXX-...-JXX-TXX

ENVIRONMENT	A
Standard	1
Explosive	2

CABLE FITTINGS	CODE	QUANTITY
Cable gland for cable Ø2.5 ÷ Ø3.6 mm	B	XX
Cable gland for cable Ø4 ÷ Ø8 mm	C	XX
Cable gland for cable Ø6 ÷ Ø11mm	D	XX
Cable gland combi for cable Ø2 ÷ Ø4mm and flexible hose Ø5 ÷ Ø7mm	E	XX
Cable gland combi for cable Ø0.7 ÷ Ø2.7mm and flexible hose Ø5 ÷ Ø7mm	F	XX
Cable gland combi for cable Ø2.5 ÷ Ø3.5mm and flexible hose Ø5 ÷ Ø6mm	G	XX
Adaptor PG9	H	XX
Cable gland for the LS oblong cable D 6,3x3,7 mm	I	XX
Adaptor M20x1.5 (Cable Ø12mm max.)	J	XX

TERMINAL BLOCKS	CODE	QUANTITY
1 BLOCK 3 TERMINALS	T	XX

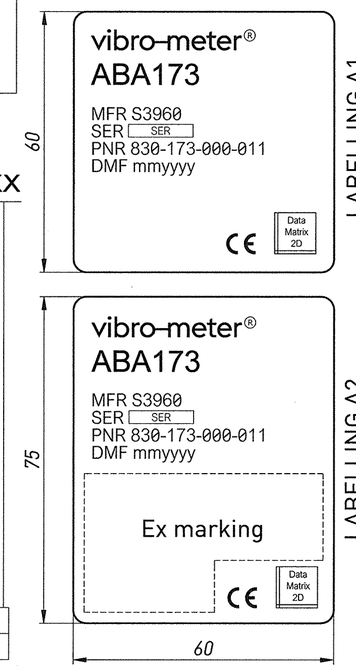

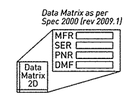

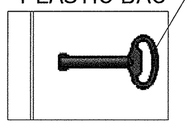

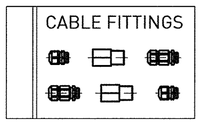

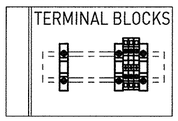

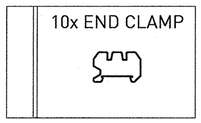

RoHS
DIRECTIVE 2011/65/UE

NO MODIFICATION ALLOWED WITHOUT PRIOR AUTHORIZATION OF Ex MANAGER

Rev.	Date	Change N°	Drawn	Appr.	Description
5	15.03.22	22042	C.Jeunet	F.Micco	Labelling A2: 75mm was 60mm. Ex marking details removed.
4	04.05.21	21042	C.Jeunet	F.Micco	Ex marking added. Latest fonts and logos used.
3	06.05.19	18235	M.Waeber	F.Micco	Design of housing code A2 modified, 2 x Rails Type TA 35/15 L=275mm was Rails Type TA 35/7,5 .Code H and J: "with plug" removed.
2	05.10.17	17280	M.Waeber	F.Micco	Labelling A2 added.
1	09.09.15	15369	M.Waeber	F.Micco	PLASTIC BAG for END CLAMP added.

INFORMATION CONTAINED IN THIS DOCUMENT MAY BE SUBJECT TO EXPORT CONTROL REGULATIONS OF THE EUROPEAN UNION, USA OR OTHER COUNTRIES. EACH RECIPIENT OF THIS DOCUMENT IS RESPONSIBLE FOR ENSURING THAT TRANSFER OR USE OF ANY INFORMATION CONTAINED IN THIS DOCUMENT COMPLIES WITH ALL RELEVANT EXPORT CONTROL REGULATIONS. ECN NO. N/A
THIS DRAWING AND/OR ITS DESIGN IS PROPRIETARY AND THE PROPERTY OF MEGGITT SA. THIS DRAWING AND/OR ITS DESIGN IS PROVIDED TO YOU SUBJECT TO THE CONDITION THAT IT SHALL NOT BE REPRODUCED, COPIED, LENT OR OTHERWISE DISPOSED OF, DIRECTLY OR INDIRECTLY. IT SHALL NOT BE USED TO FURNISH ANY INFORMATION FOR THE MAKING OF DRAWINGS, PRINTS OR APPARATUS, OR PARTS THEREFORE, EXCEPT WHERE OTHERWISE EXPRESSLY PROVIDED FOR BY CONTRACT WITH MEGGITT SA.
© MEGGITT SA 2015. ALL RIGHTS RESERVED. NO PART OF THIS PUBLICATION MAY BE REPRODUCED, STORED IN A RETRIEVAL SYSTEM, OR TRANSMITTED IN ANY FORM OR BY ANY MEANS, ELECTRONIC, MECHANICAL, PHOTOCOPIED OR IN ANY OTHER MANNER WITHOUT THE PRIOR WRITTEN PERMISSION OF MEGGITT SA.

MFR S3960 | MSS-CAD
Scale 1:5 | Format A2

MEGGITT
Meggitt SA
Rte de Moncor 4, CH-1752 Villars-sur-Glâne, Switzerland

Material:

Repl.by:

Repl.for:

ISO 2768-v

Linear Tolerances [mm]								Radius / Chamfers [mm]			Tol. on angle [°] (L [mm])			
› 0,5 ... 3	› 3 ... 6	› 6 ... 30	› 30 ... 120	› 120 ... 400	› 400 ... 1000	› 1000 ... 2000	› 2000 ... 4000	› 0,5 ... 3	› 3 ... 6	› 6	... 10	› 10 ... 50	› 50 ... 120	› 120 ... 400
-	±0,5	±1	±1,5	±2,5	±4	±6	±8	±0,4	±1	±2	±3°	±2°	±1°	±30'

Drawn	04.03.15	M.Waeber
Check.	04.03.15	N.Mancini
Appr.	06.03.15	F.Micco

HOUSING TYPE ABA173

PNR 830-173-000-011

DWG.N°
830-173-000 V 011